	Sketch number	Description	Qty
A	TYM14.000.001E	Skid Plate	1
B	TYM14.010.000	Bracket	1

	Sketch number	Description	Qty
1	1000	Hex Bolt M8x35 DIN 933	2
2	1209	Hex Bolt M8x30 DIN 933	3
3	6001	Spring Washer 8 DIN 127	5
3	6000	Washer 8x24 DIN 9021	5

Confidential
All rights in and to this document are the propety of ASFIR Ltd.and reserved to it.
This document is forwarded to the recipient under the condition of and subject to the obligation of the recipient to keep the confidentiality of its contents. Copying transfer of distribution of this document or its contents and the use of it not for the purpose intended-are strictly forbidden.

PART NUMBER ASFIR 558060

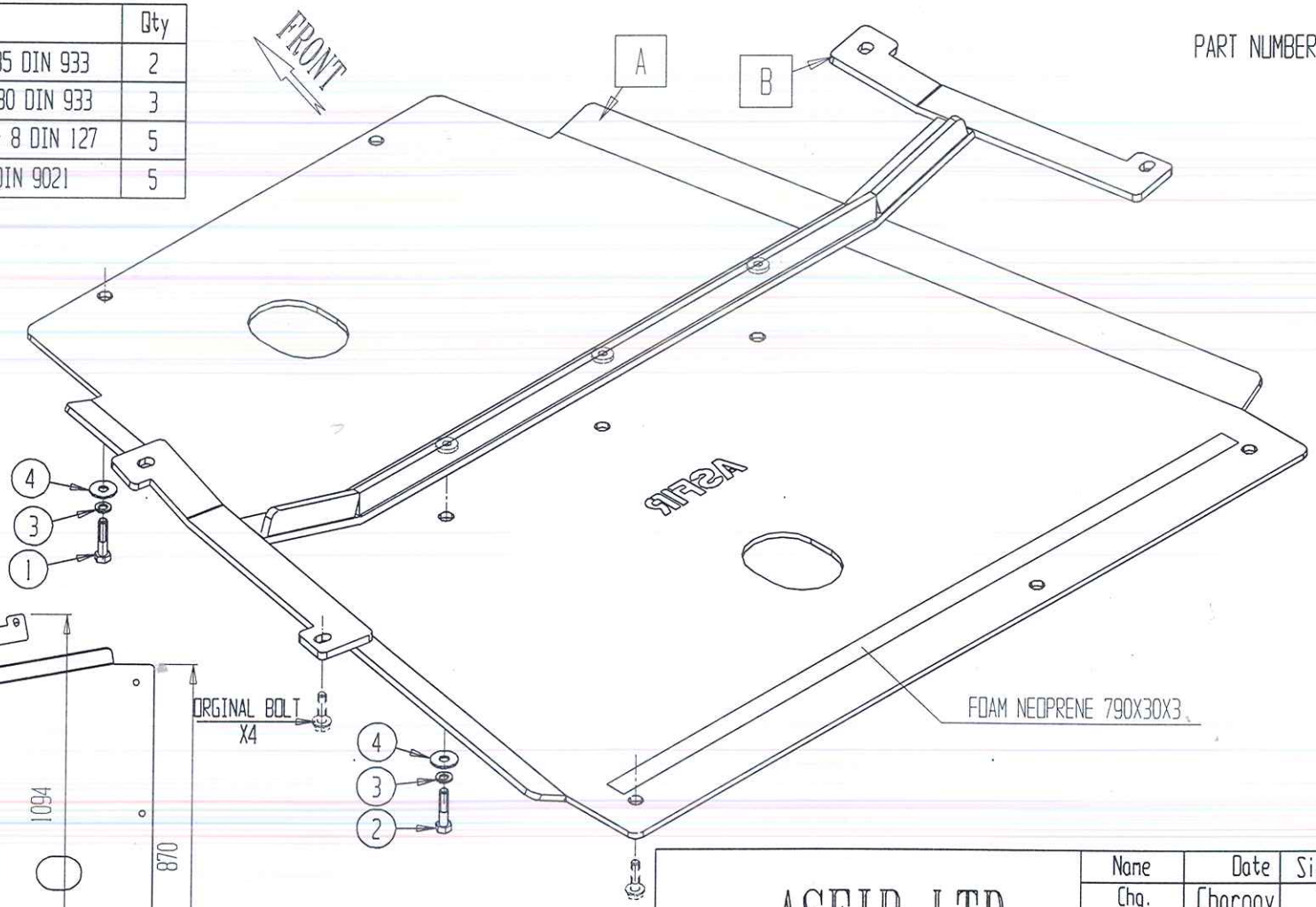

GENERAL DIMENSION
DIMENSIONS IN MILLIMETERS
Scale 1=12.5

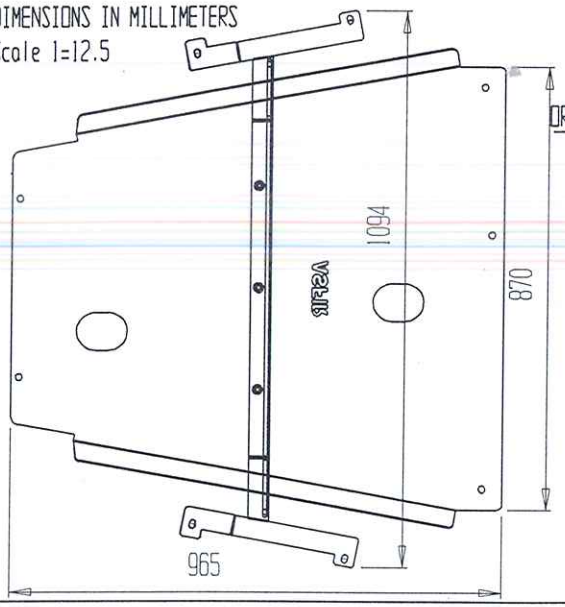

ASFIR LTD.	Name	Date	Signature	Date
	Chg.	Charnay		04.08.11
	Draw	Ofer	Ofer	31.10.04
	Check	Balk		270616
	Confirm	Dani		27/6/16
Draw Number TYM14.000.000	Description GEAR SKID PLATE			
weight 18kg	Connection to TOYOTA LANCROSER 100 DIESEL AUTO 95-08			